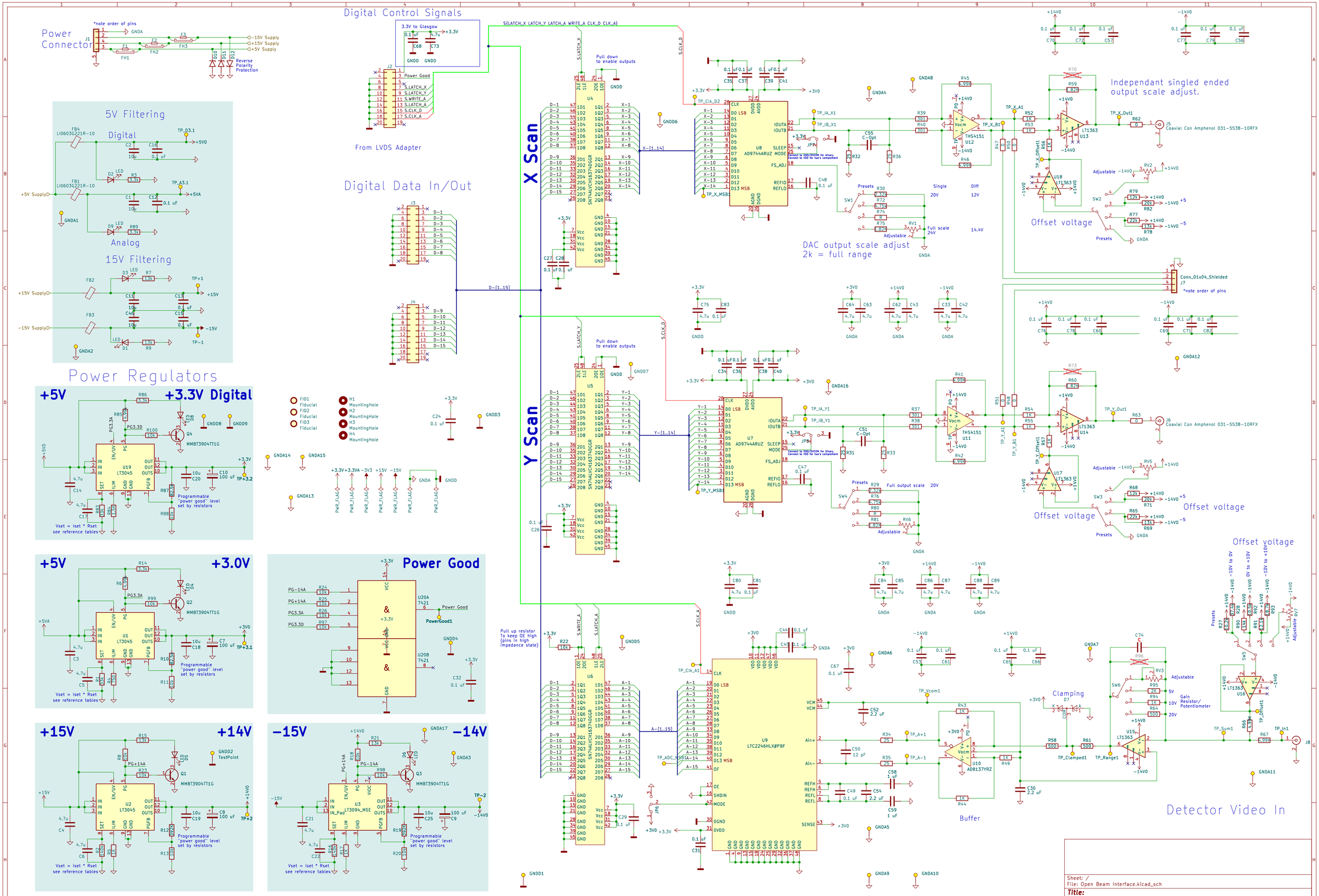
Power Connector
Digital Control Signals
3.3V to Glasgow
From LVDS Adapter
X Scan
Y Scan
Digital Data In/Out
5V Filtering
Digital
Analog
15V Filtering
Power Regulators
+5V
+3.3V Digital
+3.0V
+15V
+14V
−15V
−14V
Power Good
Independant singled ended output scale adjust.
DAC output scale adjust
2k = full range
Offset voltage
Clamping
Buffer
Detector Video In
Coaxial Con Amphenol 031-5538-10RFX
Reverse Polarity Protection
Programmable "power good" level set by resistors
Vset = Iset * Rset
see reference tables
Sheet: /
File: Open Beam Interface.kicad_sch
Title:
Size: A2
Date:
Rev:
KiCad E.D.A. 8.0.8
Id: 1/1